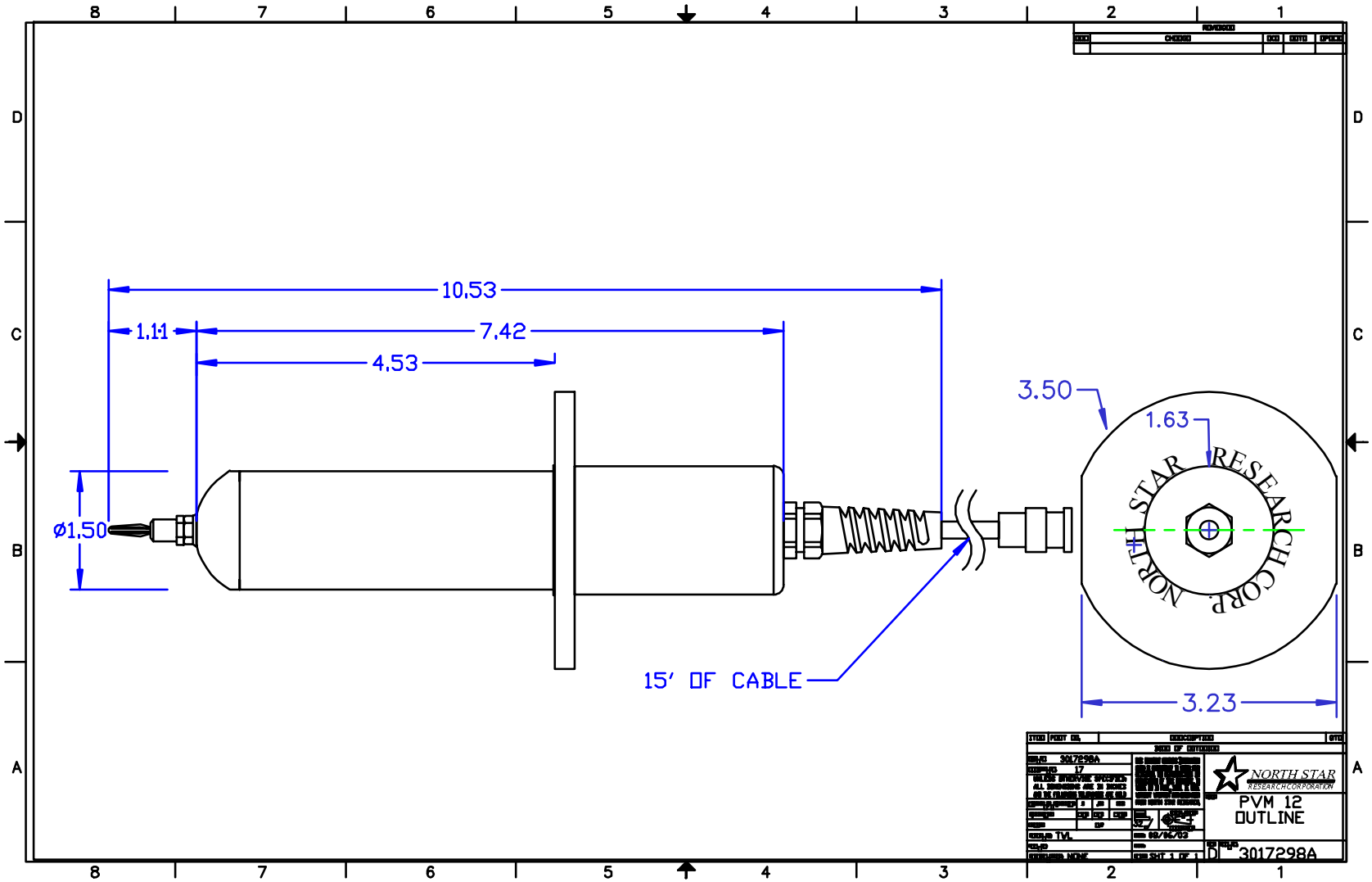
10.53
1.11
7.42
4.53
ø1.50
3.50
1.63
NORTH STAR RESEARCH CORP.
15' OF CABLE
3.23
NORTH STAR
RESEARCH CORPORATION
PVM 12
OUTLINE
3017298A

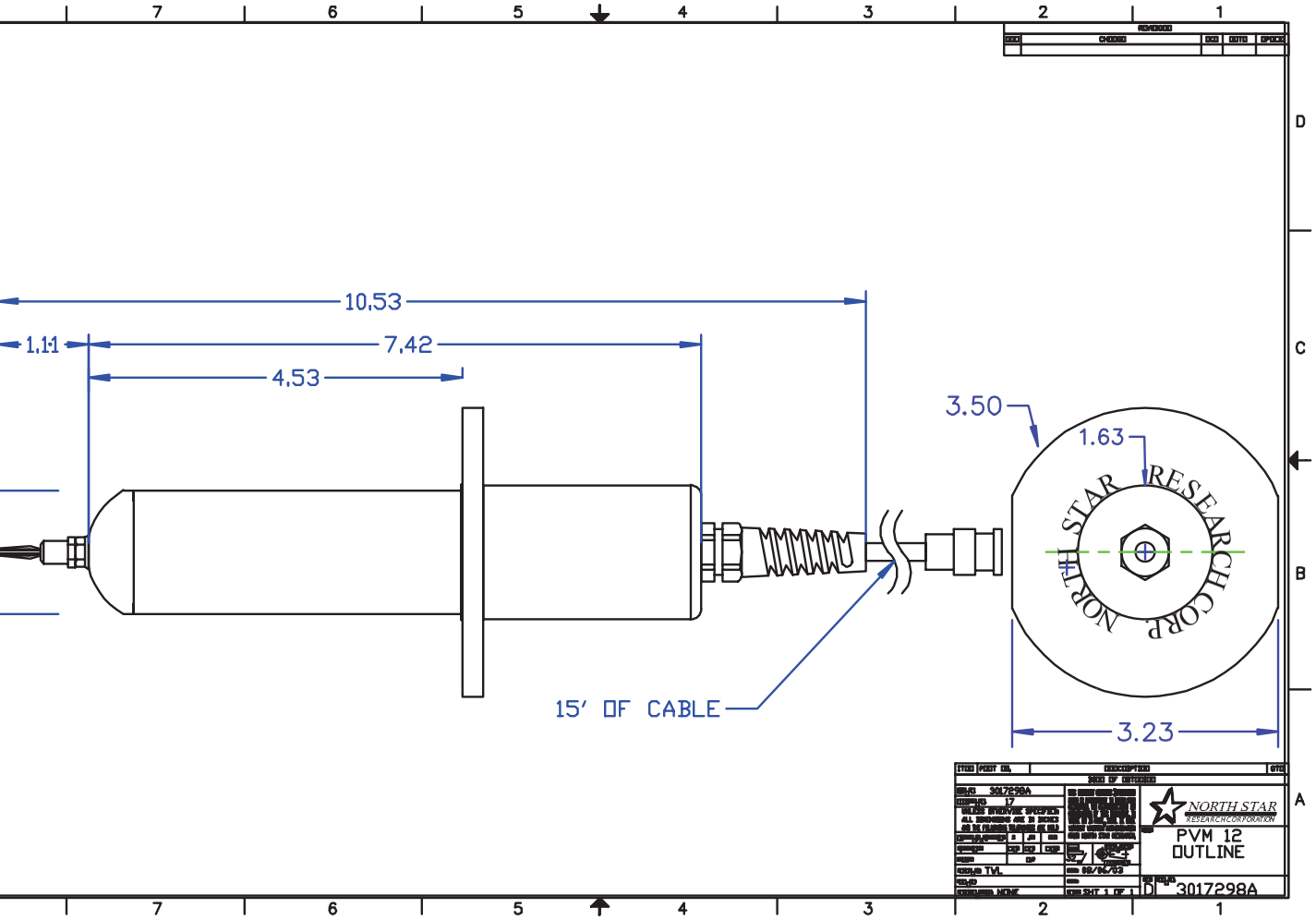
10.53
1.11
7.42
4.53
3.50
1.63
NORTH STAR RESEARCH CORP.
15' OF CABLE
3.23
NORTH STAR
RESEARCH CORPORATION
PVM 12
OUTLINE
3017298A
D